UH8

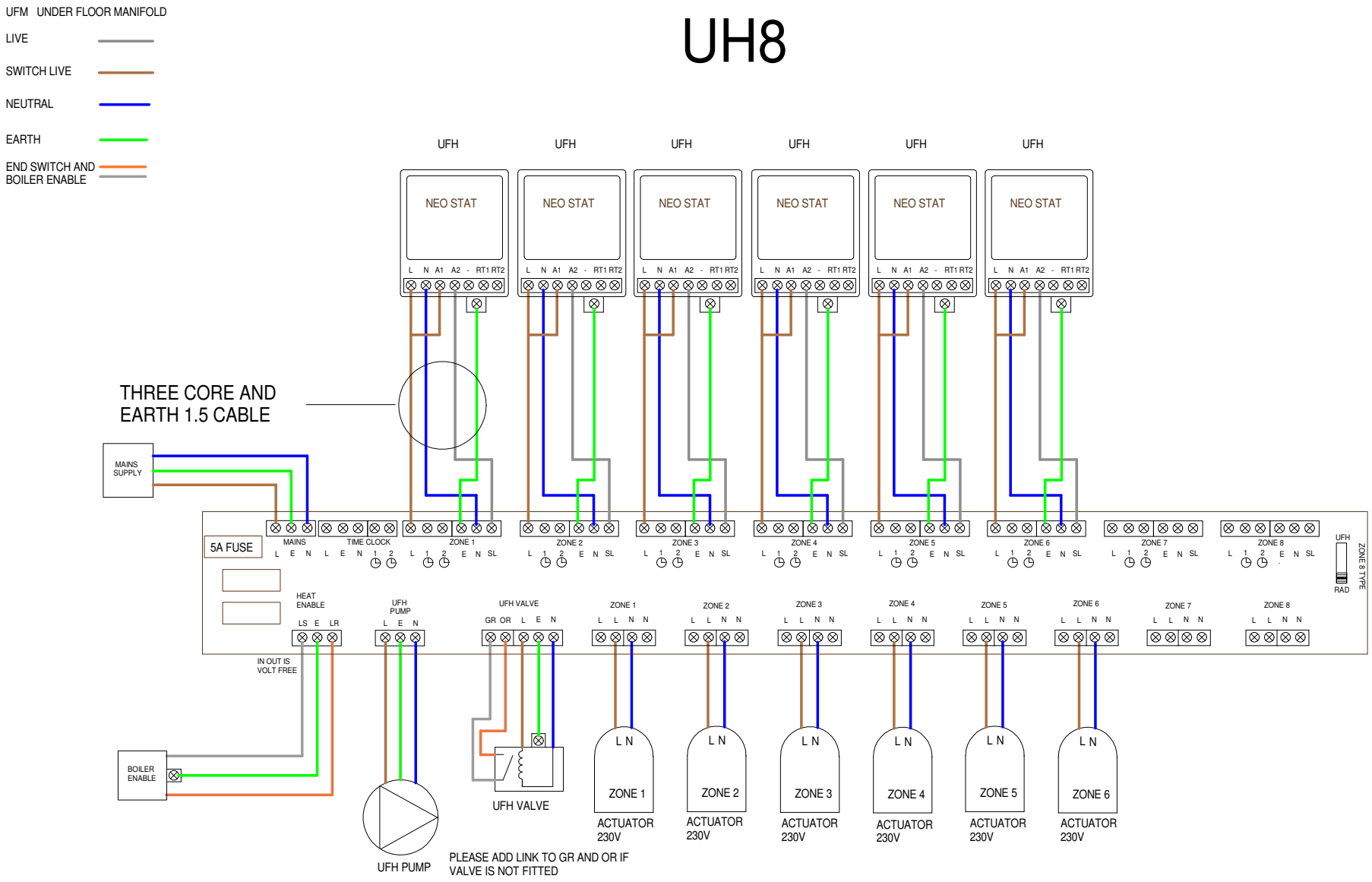

This Equipment should be installed by an appropriately qualified/ registered electrician.
Fully read the instructions for proper wiring before applying power.
The warranty does not cover damage from improper wiring or installation.

DRAWING 2
NEO TO UH8 WIRING DIAGRAM
13/05/2015